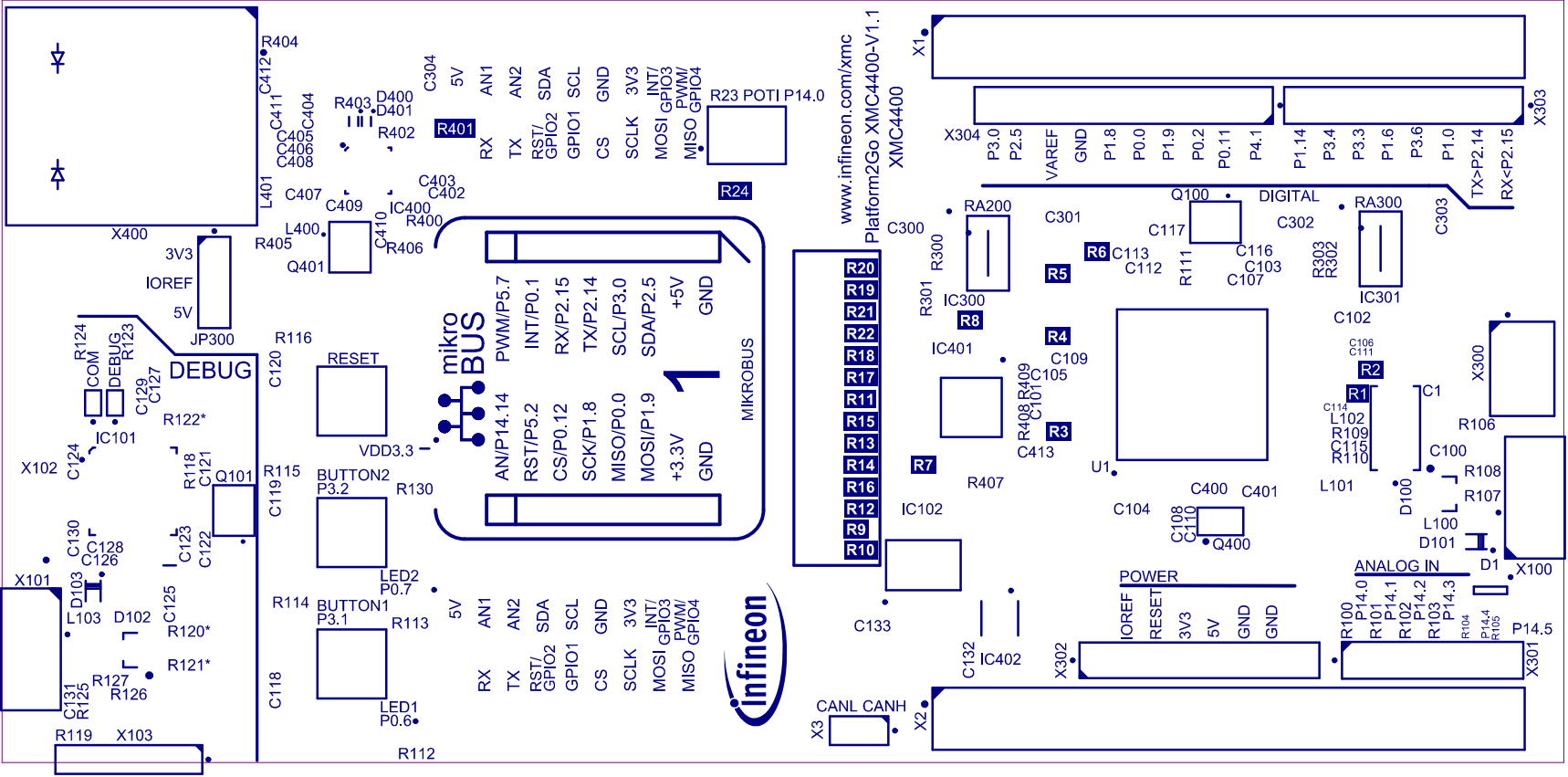

www.infineon.com/xmc
Platform2Go XMC4400-V1.1
XMC4400
DEBUG
mikro BUS
MIKROBUS
DIGITAL
POWER
ANALOG IN
RESET
BUTTON2 P3.2
BUTTON1 P3.1
LED2 P0.7
LED1 P0.6
CANL CANH
R23 POTI P14.0
X400
X101
X102
X103
X1
X2
X3
X300
X301
X302
X303
X304
JP300
IC101
IC300
IC301
IC401
IC402
IC102
Q101
Q400
Q401
Q100
U1
D100
D101
D1
L101
L102
L103
L100
L401
L400
L101
L102
L103
R1
R2
R3
R4
R5
R6
R7
R8
R9
R10
R11
R12
R13
R14
R15
R16
R17
R18
R19
R20
R21
R22
R23
R24
R116
R115
R114
R113
R112
R119
R120*
R121*
R122*
R123
R124
R125
R126
R127
R130
R401
R402
R403
R404
R405
R406
R407
R408
R409
R300
R301
R302
R303
R100
R101
R102
R103
R104
R105
R106
R107
R108
R109
R110
R111
R112
R113
R114
R115
R116
R117
R118
R119
R120*
R121*
R122*
R123
R124
R125
R126
R127
R130
C100
C101
C102
C103
C104
C105
C106
C107
C108
C109
C110
C111
C112
C113
C114
C115
C116
C117
C118
C119
C120
C121
C122
C123
C124
C125
C126
C127
C128
C129
C130
C131
C132
C133
C300
C301
C302
C303
C304
C400
C401
C402
C403
C404
C405
C406
C407
C408
C409
C410
C411
C412
C413
C1
D1
D100
D101
D102
D103
P14.0
P14.1
P14.2
P14.3
P14.4
P14.5
VDD3.3
3V3
IOREF
5V
COM
DEBUG
RX
TX
RST/GPIO2
GPIO1
CS
SCLK
MOSI
MISO
INT/GPIO3
PWM/GPIO4
AN1
AN2
SDA
SCL
GND
3V3
5V
AN1
AN2
SDA
SCL
GND
3V3
INT/GPIO3
PWM/GPIO4
RX
TX
RST/GPIO2
GPIO1
CS
SCLK
MOSI
MISO
PWM/P5.7
INT/P0.1
RX/P2.15
TX/P2.14
SCL/P3.0
SDA/P2.5
+5V
GND
AN/P14.14
RST/P5.2
CS/P0.12
SCK/P1.8
MISO/P0.0
MOSI/P1.9
+3.3V
GND
IOREF
RESET
3V3
5V
GND
GND
P3.0
P2.5
VAREF
GND
P1.8
P0.0
P1.9
P0.2
P0.11
P4.1
P1.14
P3.4
P3.3
P1.6
P3.6
P1.0
TX>P2.14
RX<P2.15

www.seggerbus.com
SEGGER
Infineon
mikro BUS
GND
+3.3V
MOSI/P1.6
MISO/P0.0
SCK/P3.0
CS/P0.12
TXD/P2.4
RXD/P2.5
SDA/P2.2
SCL/P2.3
INTP0.1
PWMP5.7
RSTP5.2
ANP1.4
GND
+5V
SDA
SCL
3V3
SCK
CS
RST
INT
PWM
MISO
MOSI
AN
RX
TX
5V
AN1
AN2
RST
CS
SCK
3V3
GND
SDA
SCL
GPIO
PWM
GPIO
MISO
MOSI
GPIO
GND
3V3
SDA
SCL
GPIO
RST
TX
R